# ALEKO®

# 2-in-1 Portable Vertical Charcoal BBQ Smoker Grill with Built-in Thermometer

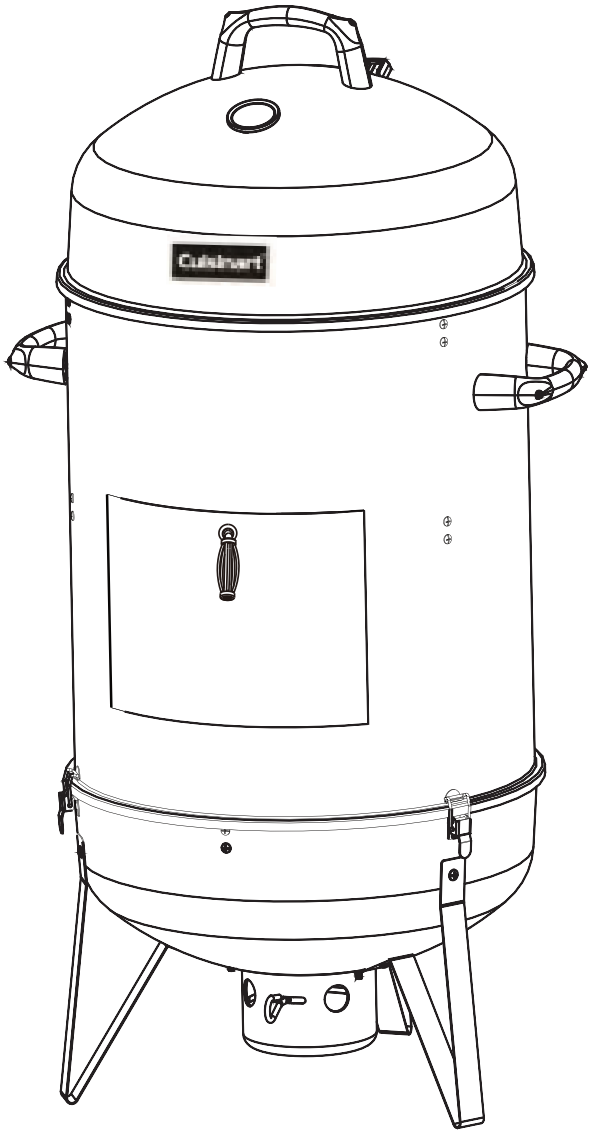


SKU: BBQSG01

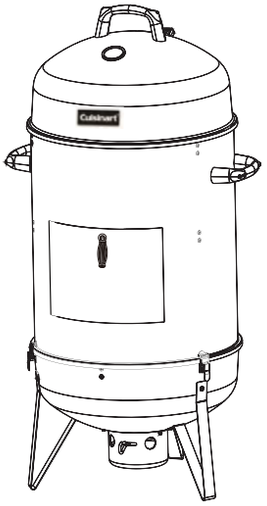


**Outdoor Grilling Products**

# Vertical 18" Charcoal Smoker

Models BBQSG01

## ASSEMBLY AND OPERATING INSTRUCTIONS

### ⚠ WARNING: FOR OUTDOOR USE ONLY

⚠ **This instruction manual contains important information necessary for the proper assembly and safe use of this smoker**

⚠ **Read and follow all warnings and instructions before assembling and using the smoker**

⚠ **Follow all warnings and instructions when using the smoker**

⚠ **Keep this manual for future reference**

**Note to installer:** Leave this Owner's Manual with the consumer after delivery and/or installation.
**Note to customer:** Leave this Owner's Manual in a convenient place for future reference.

### ⚠ DANGER – CARBON MONOXIDE HAZARD

**Do Not Use Indoors!** Do Not Use Indoors! Burning charcoal releases carbon monoxide gas.If used indoors or in a poorly ventilated area, the gas can accumulate and cause serious injury or death.

### ⚠ DANGER

**Do not use gasoline, alcohol or other flammable liquids to light charcoal. Use only charcoal lighter fluid following the manufacturer's instructions.**

### ⚠ DANGER

**Failure to follow these instructions could result in fire, explosion or burn hazard, which could cause property damage, personal injury or death.**

### ⚠ DANGER

1. **Never operate this smoker unattended.**
2. **Never operate this smoker within 10 feet (3.05m) of any flammable material**
3. **Never operate this smoker with 25 feet (7.5m) of any flammable liquid.**
4. **If a fire should occur, keep away from the smoker and immediately call your fire department . Do not attempt to extinguish an oil or grease fire with water.**

### ⚠ DANGER

**Failure to follow these instructions could result in fire, explosion or burn hazard, which could cause property damage, personal injury or death.**

## ⚠ WARNINGS

- ⚠ **This smoker is for outdoor use only. It should NOT be used in a building, garage or any other enclosed area.**
- ⚠ **The use of alcohol, prescription or non-prescription drugs may impair an individual's ability to properly assemble or safely operate this smoker.**
- ⚠ **Do not leave the smoker unattended.**
- ⚠ **Keep children and pets away from the smoker all the times.**
- ⚠ **Do not use the smoker in high wind.**
- ⚠ **Do not use gasoline, kerosene or alcohol for lighting. Use only charcoal lighter fluid. Follow manufacturer's instructions.**
- ⚠ **Do not add charcoal lighter fluid or charcoal impregnated with charcoal lighter fluid to hot or warm charcoal.**
- ⚠ **Do not remove ashes until all charcoal is completely burned out or completely extinguished.**
- ⚠ **Open the lid while lighting and getting charcoal started.**
- ⚠ **Always put charcoal on top of the charcoal grate and not directly into the bottom bowl.**
- ⚠ **Use grill mitts or hot pads to protect hands while adjusting smoker vents.**
- ⚠ **To extinguish coals do not use water. Close vents and lid and wait until smoker cools below 115° F (45°C).**
- ⚠ **Handle and store hot electric starters carefully. Never use charcoal lighter fluid or charcoal impregnated with charcoal lighter fluid with an electric starter. Follow electric starter manufacturer's instructions carefully.**
- ⚠ **When using lighter fluid always check ash collector before lighting . Fluid can accumulate in the ash collector, resulting in a fire below the bottom bowl. Remove any fluid from ash collector prior to lighting.**
- ⚠ **Do not attempt to move the smoker when in use. Allow the smoker to cool to 115 F°(45 C°) before moving or storing.**
- ⚠ **Do not use the smoker unless it is COMPLETELY assembled and all parts are securely fastened and tightened. If there are any missing or damaged parts, contact customer service for a replacement.**
- ⚠ **Do not alter the smoker in any manner.**
- ⚠ **This smoker is not intended to be installed in or on a boat or recreational vehicle.**
- ⚠ **Locate the smoker away from any combustible materials or construction by at least 10 feet in all directions. Never use smoker under any overhang or enclosure.**
- ⚠ **This smoker is not intended for and should never be used as a heater.**
- ⚠ **This smoker will be hot during and after use. Use insulated oven mitts or gloves for protection from hot surfaces or splatter from cooking liquids.**
- ⚠ **This smoker is not intended for commercial use.**
- ⚠ **Combustion by-products produced when using this product contain chemicals known to the state of California to cause cancer, birth defects, or other reproductive harm.**

## 2. Illustrated Parts List and Exploded View



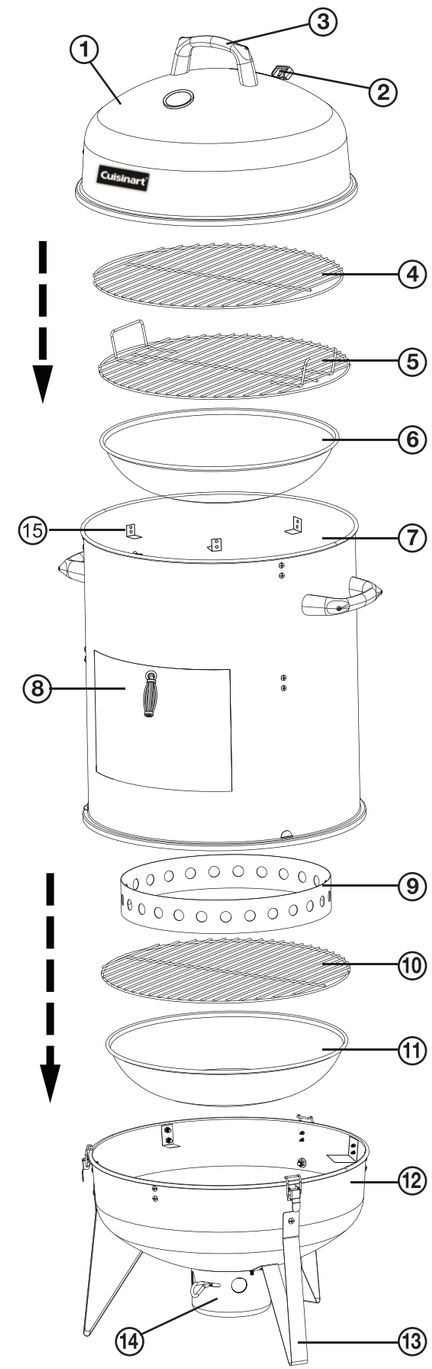


1. Lid
2. Lid Vent
3. Lid Handle
4. Upper Cooking Grate
5. Lower Cooking Grate
6. Water Bowl
7. Middle Barrel
8. Door
9. Charcoal Ring
10 Charcoal Grate
11. Bottom Bowl
12. Base
13. Legs
14. Bottom Vent/Ash Collector
15. Bracket

North American Distributor: The Fulham Group, Newton, MA 02466

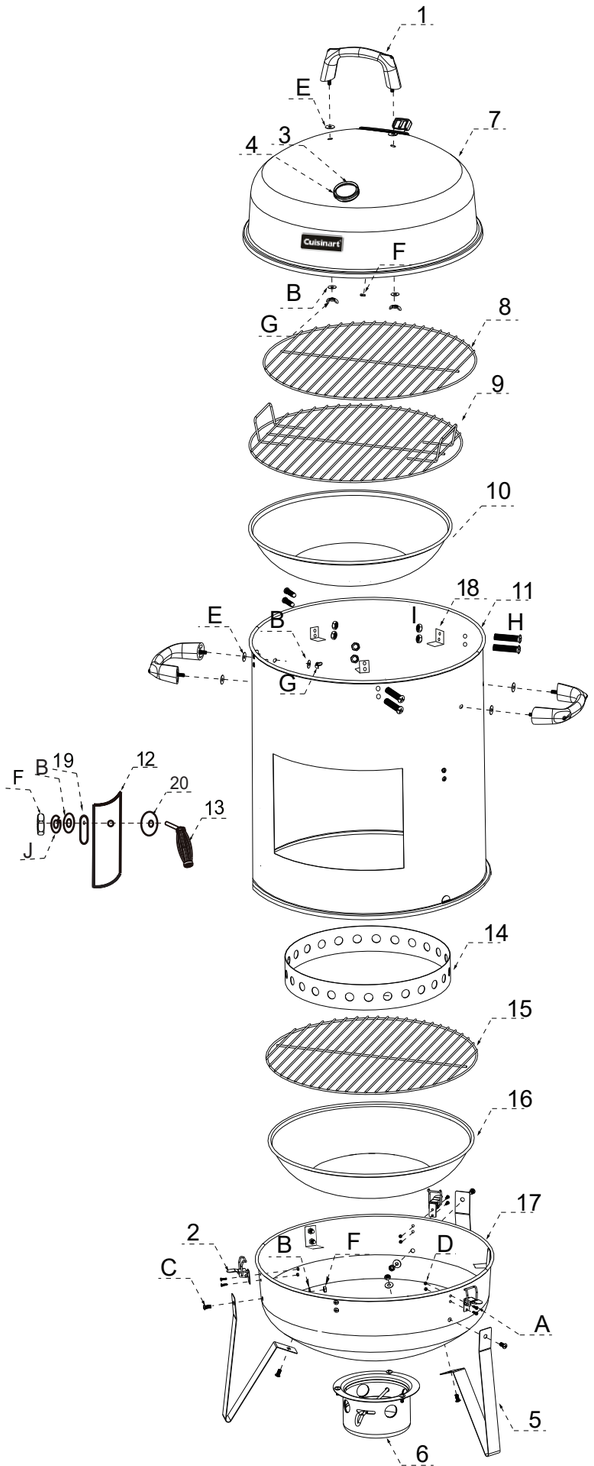


1. .....3 pcs.
2. .....3 pcs.
3. .....1 pcs.
4. .....1 pcs.
5. .....3 pcs.
6. .....1 pcs.
7. .....1 pcs.
8. .....1 pcs.
9. .....1 pcs.
10 .....1 pcs.
11. .....1 pcs.
12. .....1 pcs.
13. .....1 pcs.
14. .....1 pcs.
15. .....1 pcs.
16. .....1 pcs.
17. .....1 pcs.
18. .....3 pcs.
19. .....1 pcs.
20. .....1 pcs.

| | |
|---|---|
| A.M3X10 | X6 |
| B.φ6X16 | X13 |
| C.M6X12 | X6 |
| D.M3 | X6 |
| E.φ6X18 | X6 |
| F.M6 | X7 |
| G.M6 | X6 |
| H.M5X10 | X6 |
| I.M5 | X6 |
| J.Ø6 | X1 |

## 3. Assembly Instructions

**Remove all the contents from packaging, and make sure all parts are present before attempting to assemble!**

① 

### Step 1:

**Assemble legs**

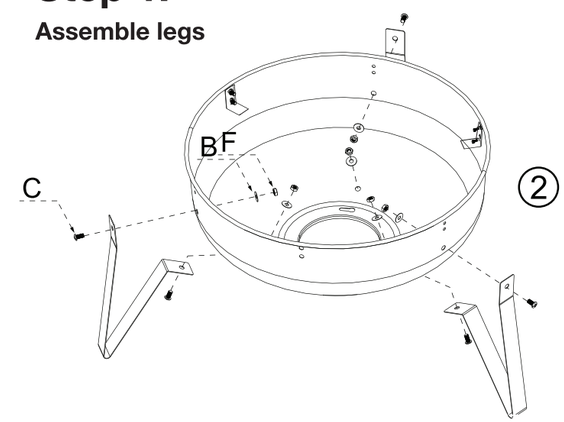


### Step 2:

**Attach bottom vents and screw in base latches**

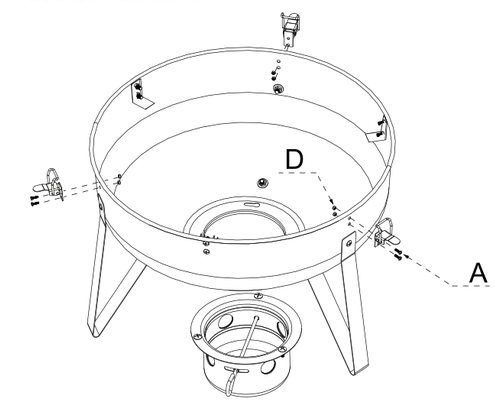


②

### Step 3:

**Attach the handles and 3 brackets to the midddle barrel**

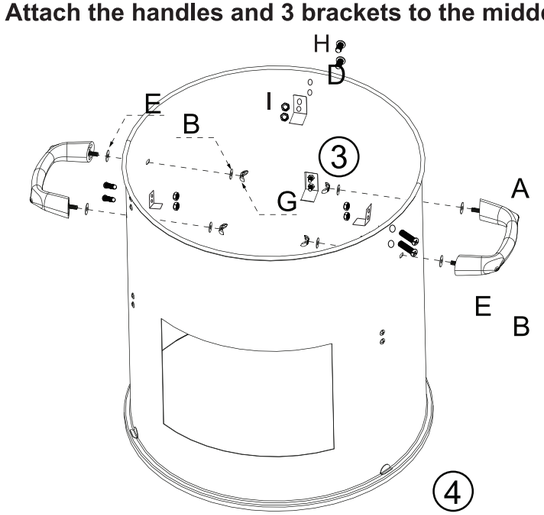


### Step 4:

**Assemble door handle**

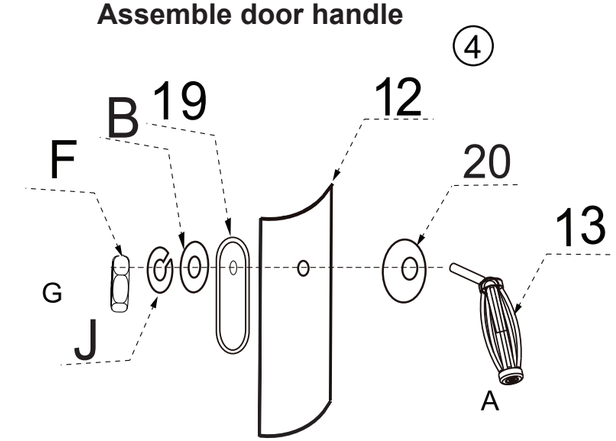

## Step 5:

**Attach door**

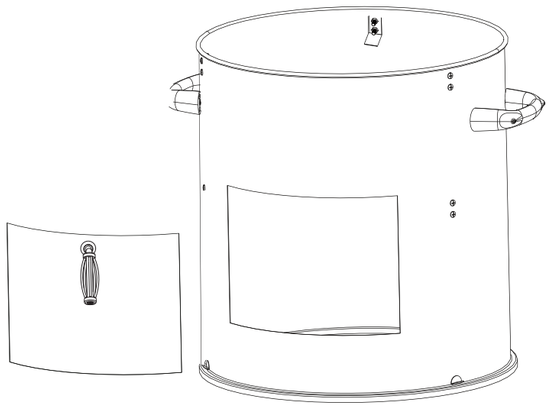

## Step 6:

**Attach vent and handle to lid**

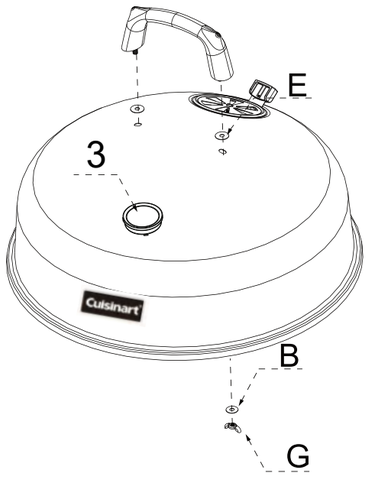


⑦

## Step 7:

**Assemble smoker according to diagram**

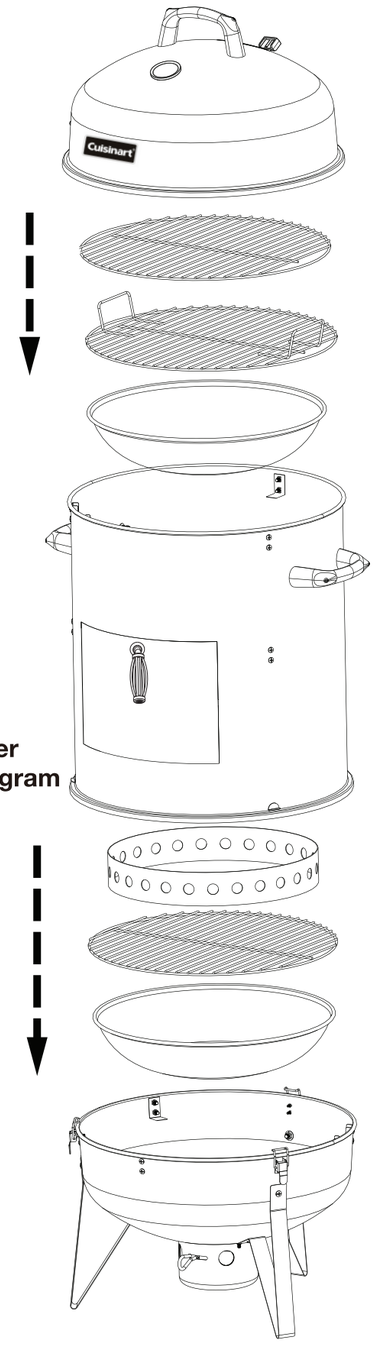


# 4. Operating Your Smoker

## 4.1 Select a Proper Location

Once you have assembled your new smoker, find a suitable location for use.

**⚠ DANGER**

- Never use this outdoor smoker inside any building, garage, shed or breezeway, under an overhang or inside any boat, trailer or recreational vehicle, to prevent possible fire and to prevent the possibility of carbon monoxide poisoning or asphyxiation.
- Always place your smoker on a hard and level surface far away from combustible materials and structures.
- Do not use this smoker under overhead combustible surface or covered area ( e.g., awnings, umbrellas, porches or gazeboes ). Keep all combustible surfaces at least 10 feet (3 meters) away.
- Locate the smoker away from any combustible and non-combustible material or construction by at least 10 feet (3m)
- Never store or use gasoline or other flammable or volatile substances in the vicinity of this smoker or in the vicinity of any other heat-generating appliance, because of the danger of starting a fire.
- Do not obstruct the flow of combustion and ventilation air.

## 4.2 Choosing your charcoal

- We recommend using charcoal briquettes or lump charcoal.
- Adding 3 or 4 lumps of dry hard wood on top of hot coals can provide added smoke flavor.

## 4.3 Air Vent Operation

Your smoker has two airflow control vents; a bottom vent below the bottom bowl and an air exhaust vent at the top of the lid. By adjusting the amount of vent opening, you can adjust the temperature of your smoker.

**⚠ DANGER**

- **The vents and vent controls and the metal surfaces around them will become very hot during smoker use. Use grill mitts or hot pads to adjust vents when smoker is in use.**

## 4.4 Lighting instructions

**⚠ DANGER**

- **Do not use gasoline, kerosene or alcohol for lighting. Use only charcoal lighter fluid. Follow manufacturer's instructions.**
- **Do not add charcoal lighter fluid or charcoal impregnated with charcoal lighter fluid to hot or warm charcoal.**
- **Do not overfill charcoal grate. Excess charcoal may cause a fire, or may cause damage to your smoker.**

1. Read all instructions before lighting.
2. Leave middle barrel off during charcoal lighting and heat up period
3. Carefully follow all instructions accompanying charcoal lighter fluid, electric charcoal starters, and or charcoal.
4. Fully open air vents on lid and bottom vent.

5. Ensure that the charcoal grate is in the smoker, and positioned properly
6. Ensure that the bottom bowl is empty (NEVER remove hot ashes; follow ash removal instructions in section 4.6 )
7. Open both vents as described in section 4.3
8. Place desired amount of charcoal onto charcoal grate. Use no more than will go above the brim of the charcoal ring. Overfilling the charcoal ring with charcoal can cause injury and damage your smoker.

**ELECTRIC STARTER**

- Follow electric starter manufacturer's instructions
- Use caution when removing hot starter

**CHIMNEY STARTER**

1 For best results with a chimney starter, remove cooking grate and set aside.

2 Put desired amount of charcoal in chimney starter

3 Place crumpled newspaper under the starter and light, being sure to follow the starter manufacturer's instructions

4 Carefully pour ignited coals onto charcoal tray, using mitts, gloves, eye protection, and any other protective equipment recommended by the starter manufacturer.

5 Replace cooking grate using a grilling mitt or grate lifting tool.

**SELF STARTING CHARCOAL**

**⚠ DANGER**

- **Do not add charcoal lighter fluid or charcoal impregnated with charcoal lighter fluid to hot or warm charcoal.**
- **Arrange desired amount of charcoal and ignite following manufacturer's instructions**

**LIGHTER FLUID**

**⚠ DANGER**

- **Follow all instructions on lighter fluid container.**
- **When using lighter fluid always check ash collector before lighting. Fluid can accumulate in the ash collector, resulting in a fire below the bottom bowl. Remove any fluid from ash collector prior to lighting.**
- **Do not add charcoal lighter fluid or charcoal impregnated with charcoal lighter fluid to hot or warm charcoal.**

1 Place desired coals onto charcoal grate. Arrange as indicated by lighter fluid manufacturer

2 Following lighter fluid manufacturer instructions, apply lighter fluid to charcoal

3 Be sure to allow all lighter fluid to burn off prior to cooking, or noticeable flavors can be added to food

*Clean your smoker after each use. DO NOT use abrasive or flammable cleaners, as it will damage the parts of this product and may start a fire. Clean with warm soapy water.

4. Operating Your Smoker

### 4.5 Operating the Smoker

- Latch the middle barrel to the bottom bowl
- Place the water bowl on the latches inside the middle barrel
- Fill the water bowl to desired fullness level (recommended halfway to full)
- Place lower cooking grate on top of water bowl
- For larger foods that need extra space-place food on lower cooking grate. For ease of access or smoking smaller foods-use upper cooking grate.
- Secure lid on middle barrel
- Average smoking temperature is approximately 225° F. Open vents to increase smoker temperature. Close vents to decrease smoker temperature. Vents may need to be adjusted throughout smoking process.

***TIPS**

- The water in the smoker is used to keep the temperature low. Check the water level every couple hours. If you notice the temperature going up in the smoker, add desired amount of water.
- We don't recommend opening the door often, but it provides access to bottom bowl charcoal/wood. chunks and lower cooking grate when necessary.
- External thermometer probes can run through the lid vent to access food in smoker.

### 4.6 When Finished Cooking

**⚠ DANGER**

- **Never use water to extinguish charcoal.**
- **Do not remove ashes until all charcoal is completely burned out or completely extinguished.**

1. Close lid, and close both vents.
2. The charcoal will slowly cool.
3. Once charcoal is cool, slide out ash collector and dispose into a metal container.

ALEKO®

**8307 S 192nd St Kent, WA 98032**
**Phone: 833-926-2323**
**hello@aleko.com**
**www.ALEKO.com**