2 BURNER STAINLESS STEEL TABLE TOP

Gas Grill Manual for Installation, Care and Maintenance

Model:PGASGR

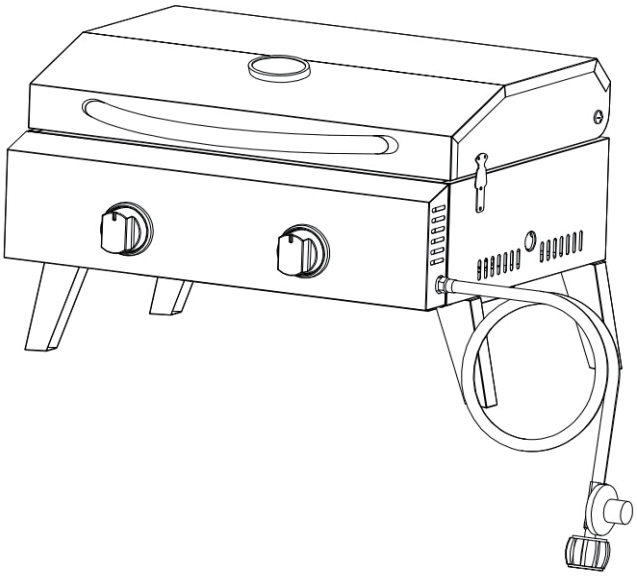

Warning:
For outdoors use only.
This instruction manual contains important information necessary for the proper assembly and safe use of the appliance.
Read and follow all warnings and instructions before assembling and using the appliance.
Follow all warning and instructions when suing the appliance.
Do not leave the appliance unattended. Keep young children and pets away.
Do not move the device during use.
Not intended to be installed in or on boats and should never be used as a heater.
Close the valve of the gas cylinder after use.
The cover shall not be used while the unit is in operation and shall not be installed until the unit has cooled.
Keep this manual for future reference.

Questions, problems, missing parts? Before returning to your retailer, call our customer service department at 833-926-2323
E-mail: hello@aleko.com

TABLE OF CONTENTS

Care and Maintenance. 3

Assembly Instructions 6

Lighting Instructions ..... .11

Exploded View Diagram and Parts List.....13

Warranty. 14

DANGER

If you smell gas:

1. Shut off gas to the appliance.
2. Extinguish an open flame.
3. Open lid.
4. If odor continues, keep away from the appliance and immediately call your gas supplier or your fire department.

Never operate this appliance unattended.
Never operate this appliance within 10ft(3.0m) of any structure,combustible material or other gas cylinder.
Never operate this appliance within 25ft(7.5m) of any flammable liquid.
If a fire should occur,keep away from the appliance and immediately call your fire department.
Do not attempt to extinguish an oil or a grease fire with water.

Failure to follow these instructions could result in fire or explosion which could cause property damage,personal injury or death.

WARNING

1. Do not store or use gasoline or other flammable liquids or vapors in the vicinity of this or any other appliance.
2. Any LP cylinder not connected for use should not be stored in the vicinity of this or any other appliance.
3. Never operate this appliance unattended.

The appliance is not intended for commercial use.The use of alcohol,prescription or non prescription drugs may impair the consumer's ability to properly assembly or safety operate the appliance.

Precautions

WHEN USING THE GRILL, DO NOT TOUCH THE GRILL RACK, BURNER GRATE OR IMMEDIATE SURROUNDINGS WHICH BECOME EXTREMLY HOT DURING USE AND CAN CAUSE BURNS.

AVOID ALLOWING EXCESS GREASE TO COLLECT IN THE GREASE TRAY AT THE BOTTOM OF THE GRILL'S FIREBOX. CLEAN THE GREASE TRAY OFTEN.

FOR PROPER BURNER LIGHTING AND PERFORMANCE, KEEP THE BURNER PORTS CLEAN. IT IS NECESSARY TO CLEAN THEM PERIODICALLY FOR OPTIMUM PERFORMANCE. FOR SAFE OPERATION, THE BURNERS MUST BE MOUNTED CORRECTLY. THE BURNERS WILL ONLY OPERATE IN ONE DIRECTION.

CLEAN THE GRILL WITH CAUTION. TO AVOID STEAM BURNS, DO NOT USE A WET SPONGE OR CLOTH WHEN CLEANING THE GRILL. TURN OFF ALL CONTROLS KNOBS AND MAKE SURE THE GRILL IS COOL BEFORE CLEANING. WHEN USING AEROSOL SPRAYS TO CLEAN BURNERS BE VERY CAREFUL. ENSURE THAT THE EQUIPMENT IS COOL BEFORE USING AN AEROSOL SPRAY, AS THE PRESENCE OF HEAT COULD CAUSE IT TO CORRODE OR LIGHT THE QUIPMENT ON FIRE.

DO NOT USE THE GRILL FOR COOKING EXCESSIVELY FATTY MEATS OR PRODUCTS, WHICH CAN CAUSE FLARE-UPS. DO NOT OPERATE THE GRILL UNDER UNPROTECTED COMBUSTIBLE CONSTRUCTION. USE ONLY IN WELL VENTILATED AREAS. DO NOT USE IN BUILDINGS, GARAGES, SHEDS, BREEZEWAYS OR OTHER SUCH ENCLOSED AREAS. THIS UNIT IS FOR OUTDOOR USE ONLY.

CAUTION: BEWARE OF FLASHBACK

CAUTION: SPIDERS AND SMALL INSECTS OCCASIONALLY SPIN WEBS OR MAKE NESTS IN THE GRILL BURNER TUBES DURING TRANSIT AND WAREHOUSING. THESE WEBS CAN LEAD TO GAS FLOW OBSTRUCTION, WHICH COULD RESULT IN A FIRE IN AND AROUND BURNER TUBES. THIS TYPE OF FIRE IS KNOWN AS “FLASH-BACK” AND CAN CAUSE SERIOUS DAMAGE TO YOUR GRILL AND CREATE AN UNSAFE OPERATING CONDITION FOR THE USER.
ALTHOUGH AN OBSTRUCTED BURNER TUBE IS NOT THE ONLY CAUSE OF “FLASH-BACK”, IT IS THE MOST COMMON CAUSE.

TO REDUCE THE LIKELIHOOD OF “FLASH-BACK”, YOU MUST CLEAN THE BURNER TUBES BEFORE ASSEMBLING YOUR GRILL, AND AT LEAST ONCE A MONTH IN LATE SUMMER OR EARLY FALL WHEN SPIDERS ARE MOST ACTIVE. ALSO PERFORM THIS BURNER TUBE CLEANING PROCEDURE IF YOUR GRILL HAS NOT BEEN USED FOR AN EXTENDED PERIOD OF TIME. A CLOGGED TUBE CAN LEAD TO A FIRE BENEATH THE GRILL.

SAFETY INFORMATION

- NEVER OPERATE THIS BBQ WITHOUT A PRESSURE REGULATOR.
- IF THE REGULATOR IS NOT SUPPLIED WITH YOUR BARBECUE - DEPENDING ON WHICH GAS YOU DECIDE TO USE – TURN TO YOUR LOCAL GAS DEALER FOR A REGULATOR.
- THE FOLLOWING SUPPLY PRESSURES ARE A GUIDE ONLY.
- SUPPLY PRESSURES STATED IN TECHNICAL DESCRIPTION AS GUIDANCE.

PROPER PLACEMENT AND CLEARANCE OF GRILL

•Never use your gas grill in a garage, porch, shed, breezeway or any other enclosed area. Your gas grill is to be used outdoors only.

•Do Not install this unit into combustible enclosures.

•Minimum clearance from sides and back of unit to combustible construction, 24 inches (61cm) from both sides and 24 inches (61cm) from the back.

•DO NOT use this appliance under overhead combustible surfaces. This outdoors cooking gas appliance is not intended to be installed in or on recreational vehicles and/or boats.

•Do Not obstruct the flow of ventilation air around the gas grill housing. Only use the regulator and the hose assembly supplied with your gas grill. Replacement regulators and hose assemblies must be those specified in this manual.

•The regulator and hose assembly must be inspected before each use of the grill. If there is excessive abrasion or wear or if the hose is cut, it must be replaced prior to the grill being put into operation. The replacement hose assembly shall be that specified by the manufacturer.

•Pressure regulator and hose assembly supplied with the outdoor cooking gas appliance must be used. Never substitute other types of regulator. Contact customer service for manufacturer specified replacement parts.

•This outdoor cooking gas appliance is equipped with a pressure regulator comply with the standard for Pressure Regulating Valves for LP Gas ANSI/ UL 144.

•Do not use briquettes of any kind in the grill.

•The grill is designed for optimum performance without the use of briquettes. Do not place briquettes on the radiant as this will block off the area for the grill burners to vent. Adding briquettes can damage ignition components and knobs, and void the warranty.

•Keep the back and side cart free and clear from debris. Keep any electrical supply cord or the rotisserie motor cord away from the heated areas of the grill.

•Never use the grill in extremely windy conditions. If located in a consistently windy area (oceanfront, mountaintop, etc.) a windbreak will be required. Always adhere to the specified clearance.

•Never use a dented or rusty propane tank.

•Keep any electrical supply cord and the fuel supply hose away from any heated surface

•While lighting, keep your face and hands as far away from the grill as possible.

•Burner adjustment should only be performed after the burner has cooled.

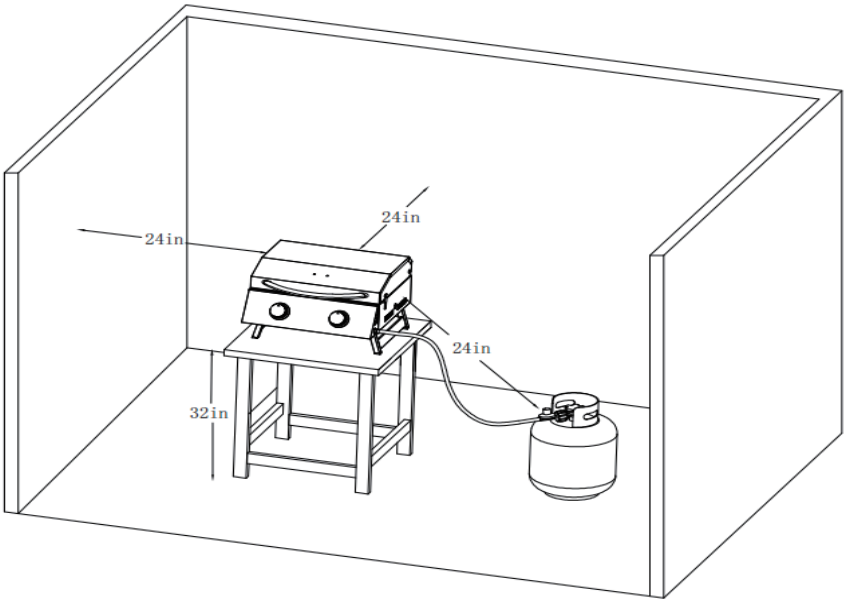

⚠ WARNING:

If step over the hose,may cause the hazard of tripping over the hose and tipping of the supply cylinder.

⚠ WARNING

1. Always operate the grill on a tabletop, no higher than 32 inches(81cm).

2. Place the propane tank on the ground immediately Adjacent to the tabletop, no further than 24 inches(61cm) from the grill.

3. Failure to follow these instructions could cause the propane tank to overheat and vent propane which could ignite causing serious personal juries or property damage and/or a tripping hazard over the gas hose or propane tank, pulling the grill off the tabletop causing serious personal injuries or property damage.

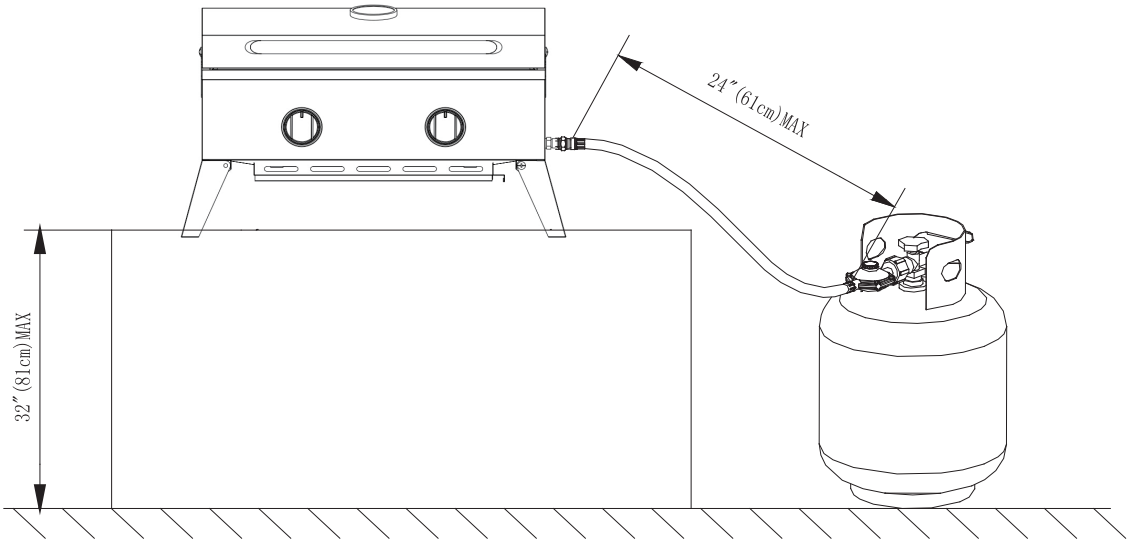

THE MARKING OF INJECTORS

The marking of injectors as diagram is the injector size.

REGULATOR AND HOSE ASSEMBLY:

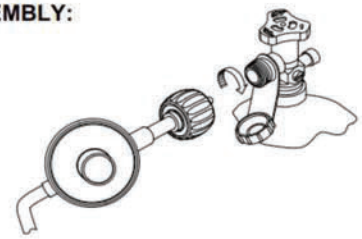

• After the assembly has been secured, turn on the gas and check for leaks. See the following "**Checking for Gas Leaks**".

Make certain this procedure is carried out in well-ventilated area and never in the presence of a flame, spark or heat source.

• Never use a dented or rusty LP tank.

• This grill is configured for Propane.

• Normally, it's necessary to change the hose of regulator every 4 years.

PREPARATION

Before beginning assembly, make sure all parts are present. Compare parts with package contents list and diagram above. If any part is missing or damaged, do not attempt to assemble the product. Contact customer service for replacement parts.

- Estimated Assembly Time: 10 minutes
- Tools Required for Assembly:

  Phillips Screwdriver (not included) and wrench (not included)

Phillips Screwdriver

Wrench

- Note: The right and left sides of the grill are designated as if you are facing the front of the grill.

ASSEMBLY INSTRUCTIONS

Fig.1 :Installing the foot stand legs as below showing.

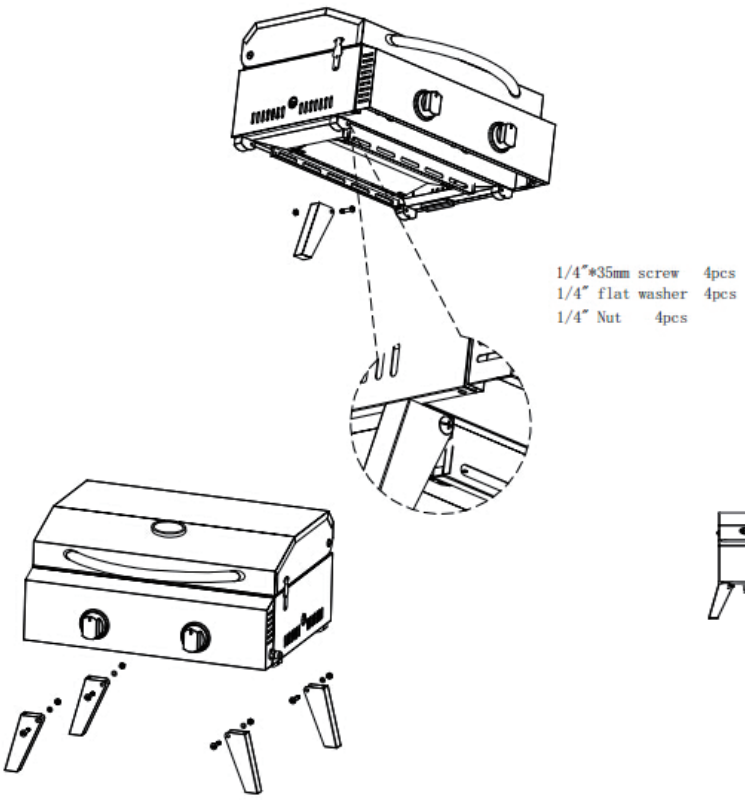

1.Surround the supporter with the leg, combine the 1/4*35mm screw and the flat washer, and insert them into the hole of the leg and supporter to connect.

2.Use the nut to fix them.

3.Unfold the legs until hearing a "click".

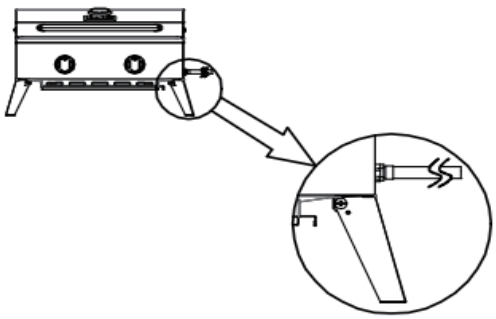

Fig2: Installing the grease tray under the firebox as below showing.

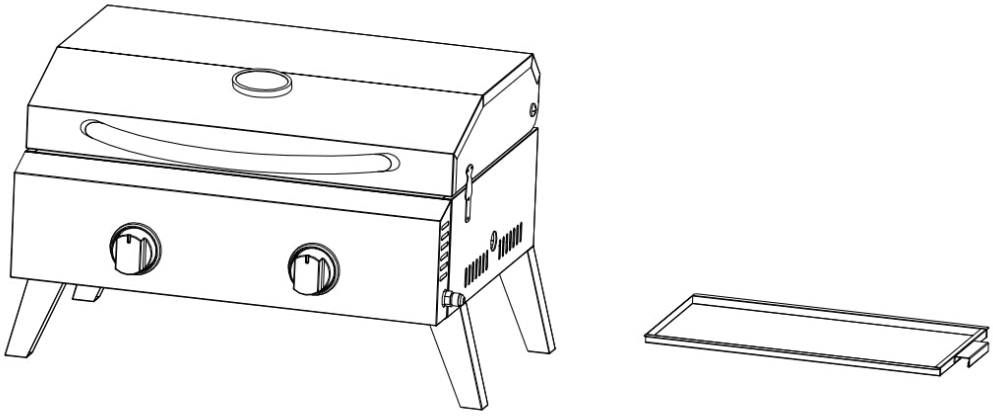

Fig3: Putting the flame tamer on the burner then put the grid on the firebox as below showing:

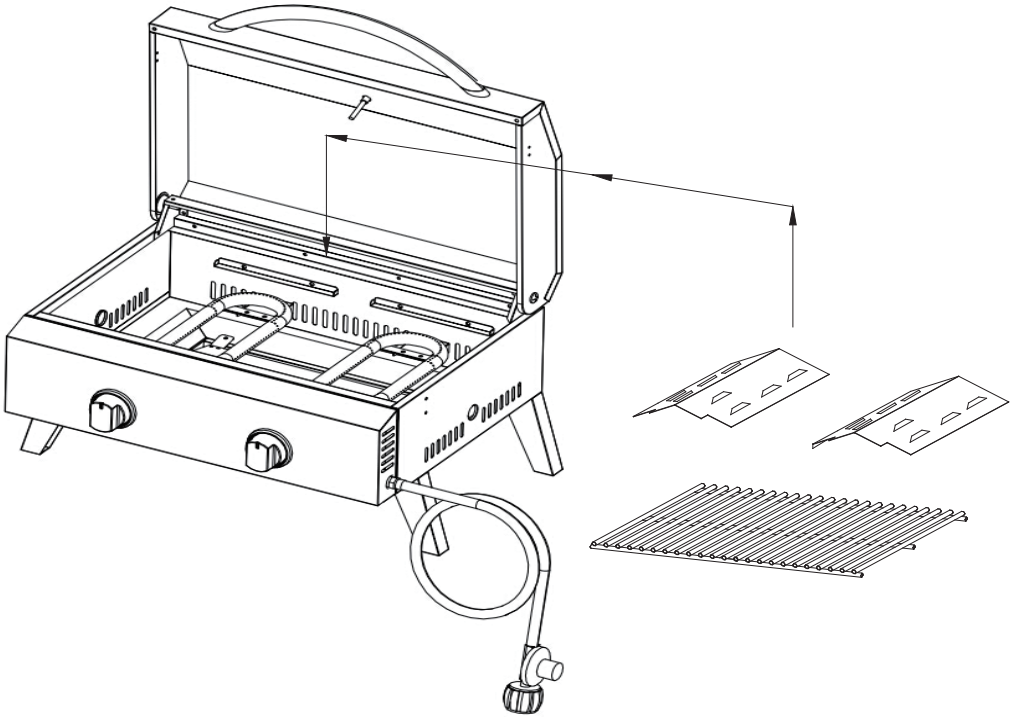

Tank Installation

If the outdoor cooking appliance is not in use, the gas must be turned “OFF” at the Liquid Propane Cylinder.

If the outdoor cooking gas appliance is not in use, the gas must be turned off at the supply cylinders. Storage of an outdoor cooking gas appliance Indoor is permissible only if the cylinder(s) is/are Disconnected and removed from the outdoor cooking gas appliance.

Cylinder(s) must be stored outdoor out of the reach of the children and must not be stored in a building, garage or any other enclosed area.

Cylinder(s) used must include a collar to protect the cylinder valve.The specific size and capacity of 20lb. L.P. cylinder (18-1/4” (46.35cm) high, 12-1/4” (31cm) diameter) Cylinder(s) to be used only.

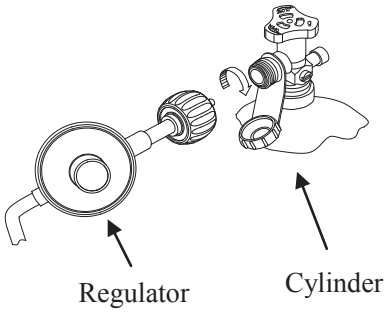

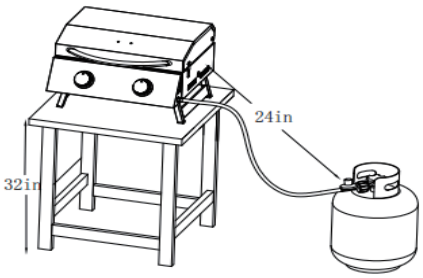

Note: Always keep the cylinder at 90° (upright) orientation to provide vapor withdraw.

Keep the fuel supply hose away from any heated surface(s).

Place dust cap on cylinder valve outlet whenever the cylinder is not in use. Only install the type of dust cap on the cylinder valve outlet that is provided with the cylinder valve. Other types of cap or plugs may result in leakage of propane.

INSTALLATION INSTRUCTIONS

GAS HOOK-UP

Only the pressure regulator and hose assembly suitable for the grill should be used. Any replacement pressure regulator and hose assembly must be specified by the grill manufacturer.

This grill is configured for Propane, butane or LPG. Do not use a Natural Gas supply.
Total gas consumption (per hour) with all burners set on “HI”:

Main burners	20,000BTU(5.8kw).
Total	20,000BTU(5.8kw).

GENERAL

Although all gas connections on the grill are leak tested at the factory prior to shipment, a complete gas tightness check must be performed at the installation site due to possible mishandling in shipment, or excessive pressure unknowingly being applied to the unit. Periodically check the whole system for leaks following the procedures listed below. If the smell of gas is detected at any time you should immediately check the entire system for leaks.

BEFORE TESTING

Make sure that all packing material is removed from the grill including the burner tie-down straps.

DO NOT SMOKE WHILE LEAK TESTING.

NEVER PERFORM LEAK TEST WITH AN OPEN FLAME.

Make a soap solution of one part liquid detergent and one part water. You will need a spray bottle, brush, or rag to apply the solution to the fittings. For the initial leak test, make sure the L.P. cylinder is full.

TO TEST

1. Make sure the control valves are in the "OFF" position, and turn on the gas supply.

2. Check all connections from the LP gas regulator and supply valve up to and including the connection to the manifold pipe assembly (the pipe that goes to the burners). Soap bubbles will appear where a leak is present.

3. If a leak is present, immediately turn off the gas supply and tighten the leaky fittings.

4. Turn the gas back on and recheck.

5. Should the gas continue to leak from any of the fittings, turn off the gas supply and contact customer service at 833-926-2323.

Only those parts recommended by the manufacturer should be used on the grill.

Substitution will void the warranty. Do not use the grill until all connections have been checked and do not leak.

GAS FLOW CHECK

Each grill burner is tested and adjusted at the factory prior to shipment; however, variations in the local gas supply may make it necessary to adjust the burners. The flames of the burners should be visually checked.

Flames should be blue and stable with no yellow tips, excessive noise or lifting. If any of these conditions exist, check to see if the air shutter or burner ports are blocked by dirt, debris, spider webs, etc. If you have any questions regarding flame stability, please call customer service 833-926-2323

ALWAYS CHECK FOR LEAKS AFTER EVERY L.P. TANK CHANGE

Check all gas supply fittings for leaks before each use. It is handy to keep a spray bottle of soapy water near the shut-off valve of the gas supply line. Spray all the fittings. Bubbles indicate leaks.

STATEMENT

1. The LP gas supply cylinder(s) to be used must be:

a) Constructed and marked in accordance with the Specifications for LP-Gas Cylinders of the U.S.Department of Transportation (D.O.T) or the National Standard of Canada, CAN/CSA-B339, Cylinders,Spheres and Tubes for Transportation of Dangerous Goods; and Commission, as applicable;

b) Provided with a listed overfilling prevention device.

c) Provided with a cylinder connection device compatible with the connection for outdoor cooking appliances.

2. The installation must confirm with local codes or, in the absence of local codes, with either the National Fuel Gas Code, ANSI Z223.1/NFPA 54, Storage and Handling of Liquefied Petroleum Gases ANSI/NFPA 58; Natural Gas and Propane Installation Code, CSA B149.1, or Propane Storage and Handing Code, B149.2, or the standard for Recreational Vehicles..

3. This outdoor cooking gas appliance is not intended to be installed in or on boats.

4. Checking orifices alignment with burners

Orifices may shift during assembly and movement. Check the orifices alignment with the burners according to the following illustrations before lighting.

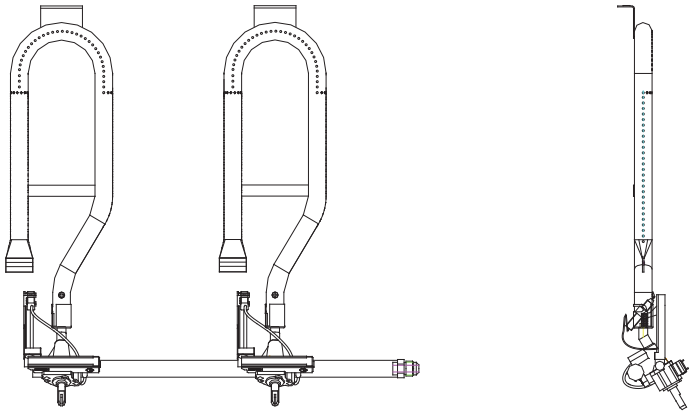

5. Maintenance instructions :

(a) Keeping outdoor cooking gas appliance area clear and free from combustible materials, gasoline and other flammable vapors and liquids.

(b) Not obstructing the flow of combustion and ventilation air.

(c) Keeping the ventilation opening(s) of the cylinder enclosure free and clear from debris.

(d) Visually checking burner flames.

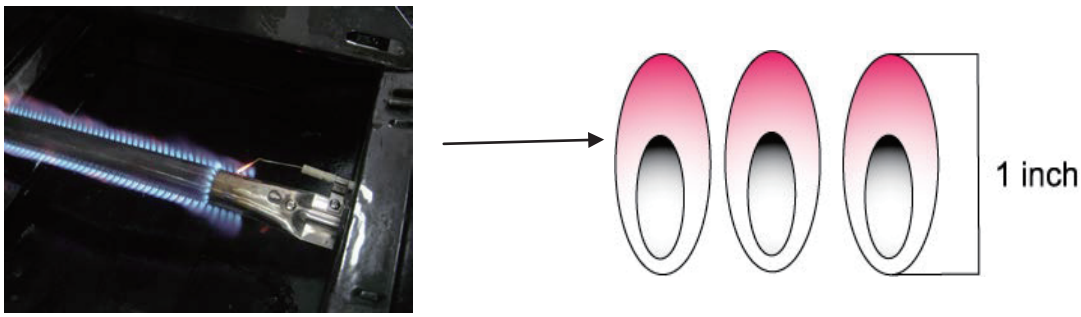

(e) Checking and cleaning burner/venturi tubes for insects and insect nests.A clogged tube can lead to a fire beneath the grill.

LIGHTING INSTRUCTIONS

Before Lighting

Inspect the gas supply hose prior to turning on the gas. If there is evidence of cuts, wear, or abrasion, it must be replaced prior to use.

Connect the regulator (type QCC791) onto the cylinder, and leak check the hose and regulator connections before operating the grill.

Only the pressure regulator and hose assembly supplied with the unit should be used. Never substitute regulators. If a replacement is necessary, contact customer service for proper replacement.

⚠WARNING

Do not use the grill if the odor of gas is present. Contact customer service at 833-926-2323.

TO LIGHT THE MAIN BURNERS

1. READ THE OPERATING INSTRUCTIONS BEFORE LIGHTING.

2. OPEN LID DURING LIGHTING AND MAKE SURE ALL KNOBS ARE IN THE OFF POSITION.

3. TURN ON THE CYLINDER VALVE. PUSH AND TURN BURNER KNOB SLOWLY TO "MAX" THEN RELEASE THE KNOB.

4. IF IGNITION DOES NOT OCCUR IN 5 SECONDS, TURN THE BURNER CONTROL(S) OFF, WAIT 5 MINUTES, AND REPEAT THE LIGHT PROCEDURE.

TO LIGHT THE GRILL WITH MATCH

If a burner will not light after several attempts using the control knobs, the burners may be lit with a Match.

STATEMENT:

The cylinder supply system must be arranged for vapor withdrawal.

⚠ **WARNING**

When lighting, keep your face and hands as far away from the grill as possible.

⚠ **CAUTION**

When using a match to light the grill make sure to use the attached lighting rod.

⚠ **WARNING**

Before lighting, please check the connection with proper procedure if leak turn the gas off.

⚠ **CAUTION**

Remove the cooking grids when using a match to light the grill.

⚠ **WARNING**

This appliance will be hot during and after use. Use insulated oven mitts or gloves for protection from hot surfaces or splatter from cooking liquids.

If the burner accidently extinguished, turn the control knob(s) off,and repeat the light procedure.

1. If you have already attempted to light the main burner with the igniter, allow 5 minutes for any accumulated gas to dissipate.
2. Insert a match into the lighting rod.
   Ignite the match and insert through the cooking grids to the burner.
3. If the burner does not light within seconds turn the knob to the “OFF” position, wait 5 minutes and try again.

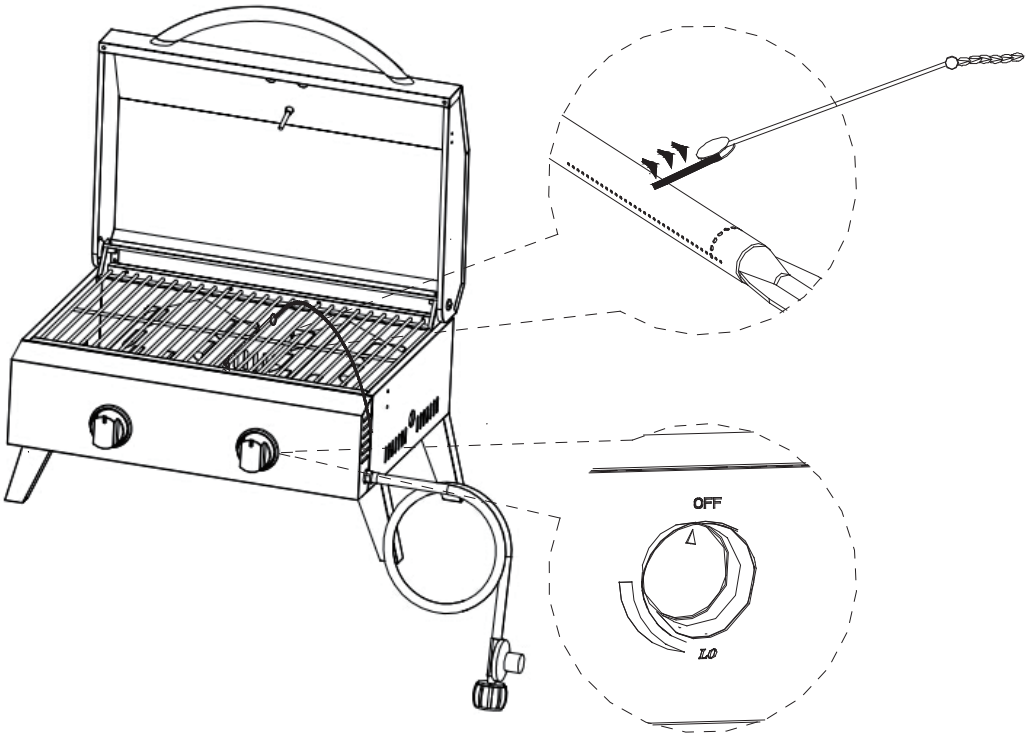

WARNING

Do not store a spare LP-Gas cylinder under or near the appliance.

WARNING

Never fill the cylinder beyond 80 percent full.

WARNING

If the information in above warning is not followed exactly, a fire causing death or serious injury may occur.

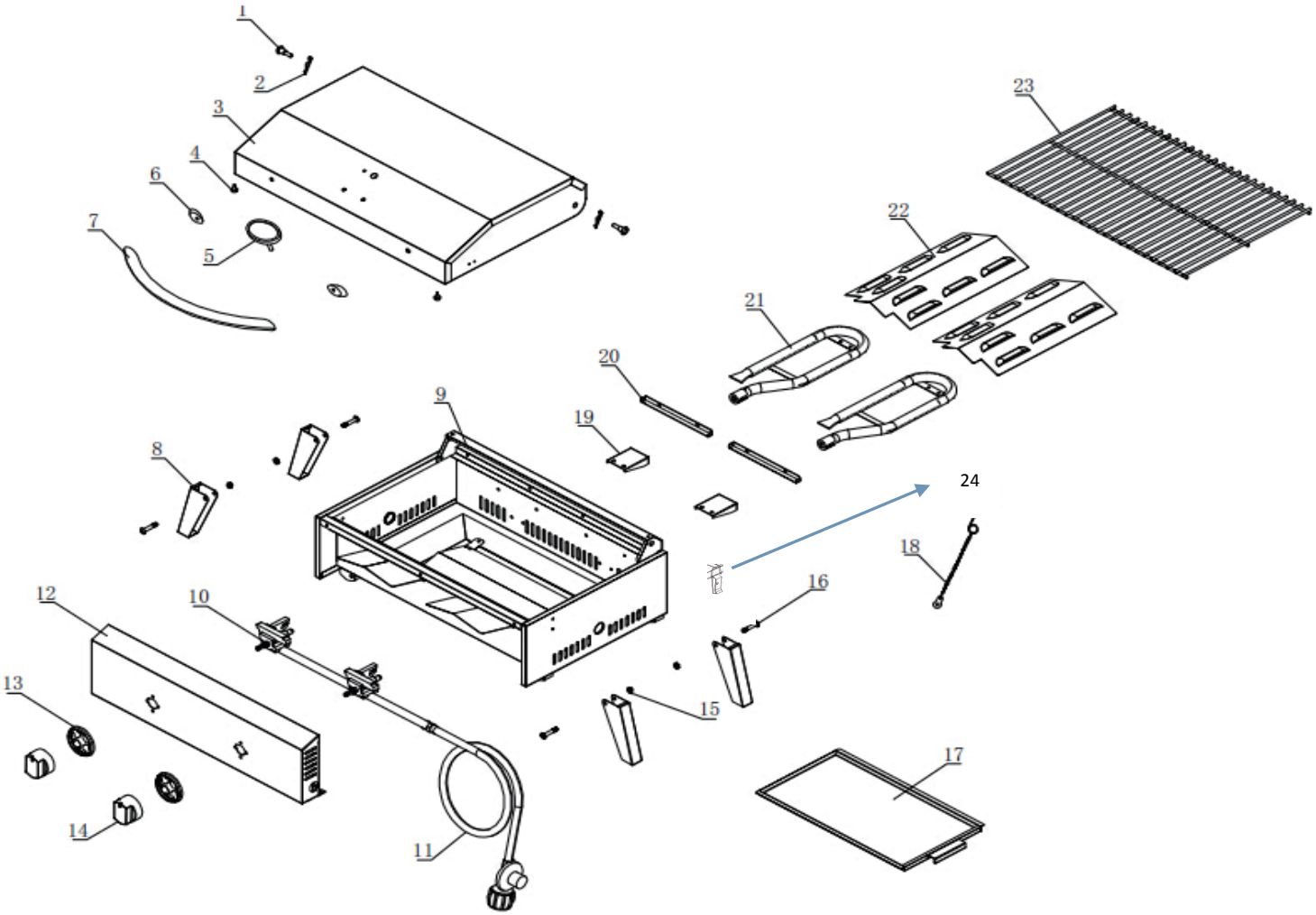

NO.	Part Description	QTY.	NO.	Part Description	QTY.
1	Main Lid Hinge Bolt	2	14	Knob	2
2	Lid “R” Pin	2	15	Leg Plug	4
3	Main Lid	1	16	Foot Stand Leg ,Right	1
4	Lid Rubber Pad	2	17	Grease Tray	1
5	Temperature gauge	1	18	Lighting Rod	1
6	Lid Handle Insulating Spacer	2	19	Burner Supporter	2
7	Handle	1	20	Fixed Plate for Flame Tamer	2
8	Foot Stand Leg ,Left	1	21	Main Burner	2
9	Main Firebox	1	22	Flame Tamer	2
10	Manifold with valve	1	23	Cooking Grid	1
11	Regulator and Hose	1	24	Latch	2
12	Control Panel	1			
13	Knob Bezel	2			

ONE-YEAR LIMITED WARRANTY

ALEKO. warrants your gas grill to be free from manufacturer's defects in workmanship or material under normal operating conditions for one (1) year from the original date of purchase. This warranty only applies if the item is purchased for use in Canada and USA is available to the original purchaser only. This warranty applies only to products sold at retail.

ALEKO.will,at its option, repair or replace free of charge any defective part, where the purchaser has notified ALEKO. within the warranty period. In the event of product replacement, the current equivalent model will be provided. The obligation of ALEKO. under this warranty is expressly limited to such repairs or replacement. This warranty does not cover the freight costs to and from the authorized repair facility.

ALEKO. reserves the right to require photographic evidence of damage, or that defective parts be returned, postage and or freight prepaid by the consumer for review and examination.

Warranty Program:

Proof of purchase is required to access this warranty program, which is in effect from the date of purchase. If you are not able to provide proof of purchase before or after the warranty has expired, you will be subject to parts, shipping and handling fees.

Full 30-Day Warranty:

Any missing parts can be replaced at no charge within 30 days from the date of purchase, with a valid proof of purchase.

Limited Warranty:

One (1) year warranty on all parts in regards to damage affecting the operation of the gas grill.

Warranty Provisions:

This warranty is non-transferable and does not cover failures due to misuse or improper installation or maintenance.

This warranty is for replacement of defective parts only. We are not responsible for incidental or consequential damages or labor costs.

This warranty does not cover chips and scratches of porcelain, non-stick or painted surfaces, nor does it cover corrosion or discolouration due to misuse, lack of maintenance, hostile environment, accidents, alterations, abuse or neglect.

This warranty does not cover damage caused by heat, abrasive and chemical cleansers, resulting in chipped porcelain enamel parts or any damage to other components used in the installation or operation of the gas grill.

Some provinces do not allow limitations on how long an implied warranty lasts, so the above limitation may not apply to you.

Some provinces do not allow the exclusion or limitation of incidental or consequential damages, so the above limitation or exclusion may not apply to you. This warranty gives you specific legal rights. You may also have other rights, which vary from province to province.

Additional assistance can be found by calling our toll-free customer service line at 833-926-2323, Monday to Friday from 9:00 AM to 5:00 PM (PST).